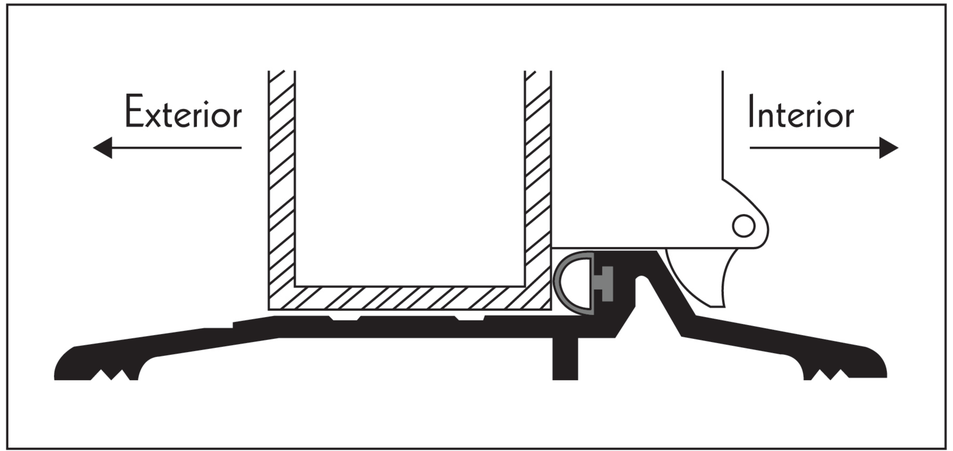Panic Threshold